ASSET VRS

REBLOC®

RB80SA_12

Temporary System

REBLOC© Temporary systems ensure smooth traffic flow in congested areas. They separate the traffic lanes from the construction area, protect the road workers and minimise the consequences of errant vehicles.

The REBLOC® RB80SA_12 is ideal for narrow road widths. The slim system width of 300 mm and the low working width W1 are important determinants, if little space is available. Each element is anchored with only 4 anchor pins, which can be easily installed and removed.

Thanks to the interlocking coupling, there are no loose parts, which prevent unauthorised removal of pieces and protects fully against vandalism.

The large contact areas with integrated elastomer pads result in a low surface pressure.

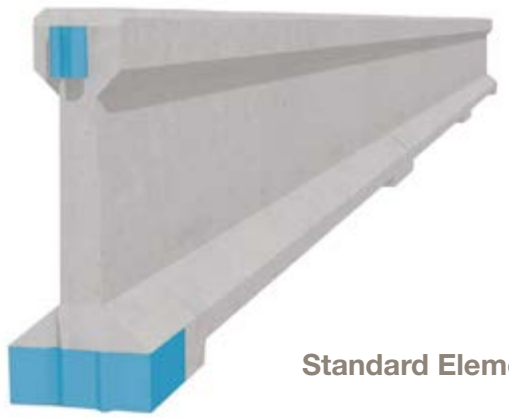

Standard Element

Features and Benefits

- 12-metre long concrete units
- High protection of construction sites and traffic lanes due to low working width W1
- Slim system width of only 300 mm
- Easy and quick installation, relocation and removal
- Part of the UKs largest Vehicle Restraint System rental pool

N2 W1

REBLOC RB80SA_12

Standard Element

N2 W1

Specifications

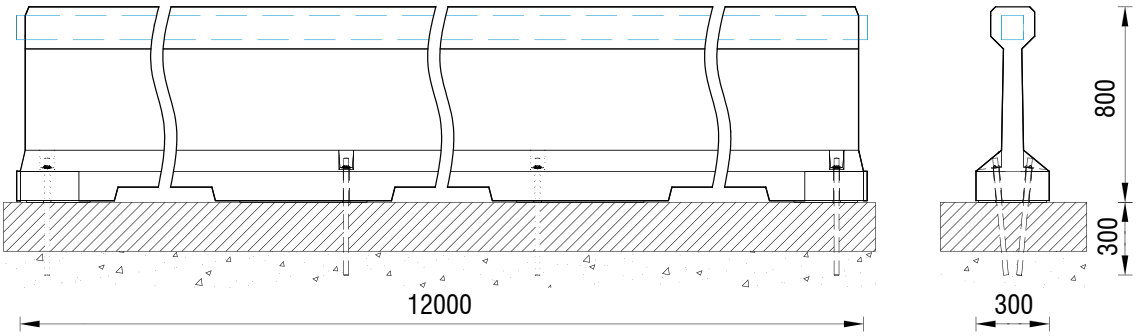

all dimensions in mm

Containment level	N2	Tested in accordance to
Working Width	W1	EN 1317-1/2, TB32, TB11
Impact severity level	ASI B	
Construction	anchored asphalt (4 x anchor pins per element)	
Terminal element	not necessary, option available	
Dimensions L x W x H	12000 x 300 x 800 mm	
Weight/element	3000 kg	
Pcs./truck (24t)	8 pieces	
Minimum installation length	120 m (without terminal element)	
Curve radius	r ≥ 260 m	
Concrete quality	C35/45, exposed parts hot-dip galvanized	
Coupling/exposed steel parts	fully integrated, exposed parts hot-dip galvanized	
Miscellaneous	elastomer pads in contact areas for protection of the road surface	

System Element - Combinable

Terminal Element
RB80S_4T (inclination 1:5)

©SW1 Ltd. - 16248 • www.sw1.co.uk

ASSET VRS
www.asset-vrs.co.uk

Additional information available by request from
sales@asset-vrs.co.uk
+44(0)1902 499 400
Springvale Business & Ind. Park,
Bilston, Wolverhampton,
West Midlands, WV14 0QL

HARDSTAFF BARRIERS
www.hardstaffbarriers.com